RAUCH

# Operator's manual




**Please read this manual carefully before using the machine!**

## Keep for future use

This operator's manual and assembly manual are integral parts of the machine. Suppliers of new and second-hand machines are required to document in writing that the operator's manual and assembly manual were delivered with the machine and handed over to the customer.

TAXON 25.1/30.1

5903060-d-en-0425

Original instructions

**Foreword**

Dear customer,
By purchasing the spreader for winter road maintenance of the TAXON series, you have shown confidence in our product. Thank you very much! We want to justify this confidence. You have purchased a powerful and reliable machine.

However, in case unexpected problems arise, our customer service department is always there for you.



**Please read this operator's manual carefully before commissioning the spreader for winter road maintenance and follow the instructions given.**

This operator's manual gives detailed instructions on the operation of the machine, as well as valuable information on assembly, maintenance, and care.

This manual may also describe equipment that is not included in your machine.

Please note that damage caused by incorrect operation or improper use cannot be covered by warranty claims.

Please enter your model type and serial number, together with the year of manufacture of your machine here.
These data are provided on the machine nameplate or on the frame.
Please state this information when ordering spare parts or optional equipment, and in the event of complaints.

Type: Serial number: Year of manufacture:

**Technical improvements**

We continuously strive to improve our products. For this reason, we reserve the right to make any improvements and changes to our machine that we consider necessary without notice. We do not accept any obligation to make such improvements or changes on machines that have already been sold.

We will be pleased to answer any other questions that you might have.

Yours sincerely

RAUCH Landmaschinenfabrik GmbH

# Table of contents

**1 Intended use** ..... **5**

**2 Safety** ..... **6**

2.1 General information ..... 6

2.2 Meaning of warnings ..... 6

2.3 General information on the safety of the machine ..... 7

2.4 Instructions for the operator ..... 8

2.4.1 Qualifications of personnel ..... 8

2.4.2 Instruction ..... 8

2.4.3 Accident prevention ..... 8

2.5 The dimensions and the axle loadings ..... 9

2.6 The sources of hazards ..... 10

2.6.1 General safety and accident prevention regulations ..... 10

2.6.2 Mounting ..... 11

2.6.3 The spreader disc and ejection channel ..... 11

2.6.4 Maintenance ..... 12

2.6.5 Appearance (special equipment) ..... 12

2.6.6 Conveyor screws ..... 12

2.6.7 Electrical system ..... 13

2.6.8 Touching up the paintwork ..... 13

2.6.9 Protective clothing for operators ..... 13

2.6.10 Storage ..... 14

2.6.11 Transport and packaging for initial delivery ..... 14

2.7 Safety equipment, warnings and instructions ..... 14

2.7.1 Position of guards and safety labels ..... 15

2.7.2 Checklist for checking the guards ..... 17

**3 Technical specifications** ..... **18**

**4 Coupling and uncoupling** ..... **19**

4.1 Preparation for initial attachment to the supporting vehicle ..... 19

4.2 Parking supports ..... 19

4.3 Installation of the electronic control desk with wiring harness ..... 20

4.3.1 Control desk ..... 20

4.3.2 Connection cable ..... 20

4.3.3 Battery connection cable ..... 20

4.3.4 Drive impulse connection cable ..... 20

4.3.5 Connection cable to the spreader ..... 20

4.4 Structure of the three-point attachment point at the rear ..... 20

4.4.1 Procedure for attachment ..... 20

4.5 Safety distance to be maintained ..... 24

4.6 Removal of the standard parking support feet and the wooden transport pallet ..... 25

4.7 Correct working height ..... 26

4.8 Safety bars ..... 26

4.9 Uncouple the machine ..... 27

**5 Commissioning** ..... **28**
5.1 Starting the vehicle and bringing the spreader into operation ..... 28
5.2 Setting the spreading distribution ..... 28
5.2.1 Manual spreading distribution adjustment ..... 28
5.2.2 Electronic spreading distribution adjustment (optional feature) ..... 29
5.2.3 Graphical representation of the spreading distribution ..... 29
5.3 Operating the manual controls ..... 30
5.4 Instructions for the hydraulic system ..... 30
5.5 Emptying the hopper when stationary ..... 31
**6 Maintenance, greasing and cleaning** ..... **32**
6.1 Greasing the spreader disc shaft ..... 32
6.2 Chain drive for the conveyor screw ..... 33
6.3 Check the hydraulic oil hoses ..... 33
6.4 Cleaning the machine ..... 34
6.5 Cleaning stainless steel and caring for it! ..... 34
6.6 Electrical system ..... 36
6.7 Flange bearings ..... 37
6.8 Hydraulic diagram ..... 38
**7 Faults and possible causes** ..... **39**
7.1 Faults that you can rectify yourself ..... 39
7.2 Graphical and photographic representation of components ..... 43
7.2.1 Level sensor ..... 43
7.2.2 Hydraulic valve with pressure compensator ..... 44
7.2.3 Electronic control unit (infra-red - ESK) ..... 44
7.2.4 Screw monitoring ..... 46
7.2.5 Disc probe ..... 47
**8 Important information** ..... **48**
8.1 Appendix ..... 49
**9 Guarantee and warranty** ..... **50**

# 1 Intended use

Any use beyond these specifications is considered to be contrary to the intended use. The manufacturer shall not assume any liability for any damages resulting from this. The risk is solely carried by the operator.

The intended use also comprises compliance with the operating, maintenance, and repair conditions prescribed by the manufacturer.

The machine may only be used, maintained and repaired by people who are familiar with the characteristics of the machine and who are aware of the risks.

The instructions regarding the operation, service, and safe handling of the machine as described in this operator's manual and declared by the manufacturer in the form of warning signs and symbols on the machine must be strictly followed during operation. The relevant accident prevention regulations and other generally recognized safety-related, occupational health and road traffic regulations must be observed when using the machine.

Unauthorized modifications to the machine are not permitted. Such modifications exclude any liability of the manufacturer for any resulting damages.

The machine is suitable for spreading de-icing and/or gritting materials on roads and carriageways for winter road maintenance.



The spreading materials may be applied only in a dry and free-flowing state!

The intended use also comprises the compliance with the instructions and warnings issued by the manufacturer.

For reasons of safety, unauthorized rebuilding and modifications to the machine are prohibited!

In the following chapters, the spreader for winter road maintenance is referred to as the "machine".

**⚠CAUTION!**

The machine may be operated only when all guards are in place and correctly fitted on the supporting vehicle! The machine may not be operated separately from the supporting vehicle!

■ ***Foreseeable misuse***

The manufacturer provides warning notes and signs on the mineral fertilizer spreader relating to foreseeable misuse. These warnings and warning symbols must always be observed. This way, application of the machine against the intentions of the operator’s manual is prevented.

# 2 Safety

## 2.1 General information

The chapter **Safety** contains basic warning notes as well as working and traffic safety instructions for the usage of the installed machine.

The adherence to the instructions in this chapter is a prerequisite for the safe handling and trouble-free operation of the machine.

There are additional warnings in the other chapters of this operator's manual, which must also be observed. The warning instructions are given before the text for the relevant actions.

Warning notes on the supplier components can be found in the respective supplier documentation. These warning instructions must also be observed.

## 2.2 Meaning of warnings

The warnings in the operator's manual are classified according to the severity of the risk and the probability of its occurrence.

The warning symbols draw attention to the residual risks to which users of the machine are exposed. The warnings used are structured as follows:

| |
|---|
| Symbol + **signal word** |
| Explanation |

**Level of danger of warnings**
The level of danger is indicated in the signal word. The levels of danger are classified as follows:

**⚠ DANGER!**

**Type and source of danger**

This warning warns of a danger posing an immediate threat to the health and life of people.

Ignoring these warnings will result in severe injury or death.

▶ Always observe the measures described to prevent this danger.

**⚠ WARNING!**

**Type and source of danger**

This warning warns of a potentially dangerous situation for personal health.

Ignoring these warnings leads to severe injury.

▶ Always observe the measures described to prevent this danger.

**⚠CAUTION!**

**Type and source of danger**

This warning warns of a potentially dangerous situation for personal health.

Ignoring these warnings leads to injury.

▶ Always observe the measures described to prevent this danger.

***NOTICE!***

**Type and source of danger**

This warning warns of material and environmental damage.

Ignoring these warnings will result in damage to the machine and to the environment.

▶ Always observe the measures described to prevent this danger.



This is an instruction:
General instructions contain tips for the operation and information that is particularly useful, but no warnings about hazards.

## 2.3 General information on the safety of the machine

The machine is state-of-the-art and is compliant with the applicable technical regulations. However, during its use and maintenance, risks to the health and life of the user or third parties or damage to the machine and other objects can still occur.

For this reason, the machine may only be operated:
- In a flawless and roadworthy condition,
- Taking into account safety and risks.

This requires you to have read and understood the contents of this operator's manual. You must be aware of the relevant accident prevention regulations as well as the generally acknowledged safety, occupational health and traffic regulations and be able to apply them.

### ■ *Machine safety*

Machines in this range are equipped with safety features and have undergone a safety test. Despite this, negligent or grossly negligent behavior can pose risks to the life and limbs of the operator and other personnel, and risk of causing damage to the machine or other items of property.

**NOTICE!**

**This documentation contains instructions which must be complied with!**

- ▶ These must be read and understood by fitters, supervisors and operators before initial erection and commissioning of the machine. This documentation must always be kept available in the supporting vehicle.
- ▶ This is for your safety!

Other documents to be aware of and complied with:

- the Operator's Manual of the supporting vehicle
- the Operator's Manual of the respective control system
- the Health and Safety at Work Act
- StVO and StVZO
- Basic regulations for accident prevention BGV A1
- DGUV Information sheet 214-049 “One day in winter road maintenance”
- the hazardous Substances Act

## 2.4 Instructions for the operator

The owner is responsible for the intended use of the machine.

### 2.4.1 Qualifications of personnel

Before starting any work on or with the machine, all persons who are involved in operation, maintenance or service must have read and understood this operator’s manual.

- The machine may only be operated by instructed personnel authorized by the owner.
- Persons who are apprentices, in training or under instruction may only work on the machine under the supervision of an experienced person.
- Maintenance and service may only be carried out by qualified maintenance personnel.

### 2.4.2 Instruction

Distribution partners, works representatives or employees of the manufacturer will instruct the operator regarding the operation and maintenance of the machine.

The owner must ensure that newly recruited operating and maintenance personnel are instructed to the same extent and with the same care with regard to the operation and repair of the machine in compliance with this operator’s manual.

### 2.4.3 Accident prevention

Safety and accident prevention regulations are legally specified in every country. The owner of the machine is responsible for observing the regulations applicable in the country of operation.

The following instructions must also be observed:

- Never let the machine run without supervision.
- Do not ride on the machine while it is working or being transported (**no passengers**).
- **Do not use** machine parts as steps.
- Always wear tight fitting clothes. Do not wear work clothes with belts, loose threads or other items that could get caught.
- Follow the manufacturer's warnings when handling chemicals. You may have to wear personal protective equipment (PPE).

## 2.5 The dimensions and the axle loadings

Installing the machine changes both the dimensions of the carrier vehicle and also the loadings on its axles. The operating personnel must be aware of this, especially the effect on the permissible axle loadings when the distribution hopper is filled.

Allowance must also be made for the changes to weights and dimensions arising from fitting other pieces of equipment (such as a snowplough) in combination. On the side of the automatic spreader there is a mark indicating the position of the center of gravity of the unloaded machine. We recommend that the actual axle loadings are checked using a weighing machine.

The permissible axle loadings and payloads of the carrier vehicle must not be exceeded, specifically when all built-on and additional items of equipment are attached. This may mean in some circumstances that the machine cannot be completely filled, or it must be operated with a completely empty hopper. This latter case may arise if at the same time it is acting as the counterbalance for front-mounted equipment or that the value specified by the manufacturer for the ratio between the front axle loading and rear axle loading cannot be maintained.

## 2.6 The sources of hazards

### 2.6.1 General safety and accident prevention regulations

- Going underneath the parked machine is absolutely prohibited!
- Going into the distribution hopper or on to the three-point hydraulics of the carrier vehicle is absolutely prohibited!
- Rectification of faults in the distribution hopper and all types of maintenance and repair work may be performed only when the drive is switched off and when the machine is if possible detached from the carrier vehicle. In such cases, additional safety precautions should be taken as required.
- In addition withdraw the ignition key from the carrier vehicle as a precaution against accidental or mistaken starting up, and put it in a safe place.
- After faults on the machine have been rectified, and after maintenance and repair work on the machine has been completed, mount all safety guards again in their correct positions!
- The machine may be operated only when all guards are in place!
- Before every operating session and after every maintenance and repair activity, the operator must check that all safety guards are in place, working to the checklist (see *Chapter 2.7.2 - Checklist for checking the guards - Page 17*).
- Whilst the drive is switched on, never put hands or feet through the railings of the mesh guard cover, or insert objects into the distribution hopper!
- It is essential to detach the automatic spreader before starting any maintenance, repair or installation activities on the carrier vehicle
- Safety symbols and stick-on labels displaying safety symbols must be clearly recognizable! Stick-on labels that are partially or entirely unrecognizable must be replaced.
- When operating on public roads, comply with the relevant regulations!
- Before driving away and before starting a spreading operation, check the immediate area around the machine! Make sure you have a clear view! Ensure that nobody is present in the working area and hazard zone of the machine!
- Carrying passengers on the spreader when it is on the move for work or transport is strictly prohibited!
- Couple the machine correctly and use only the specified equipment to attach it and secure it!
- When attaching and detaching the machine, use the standard support legs!
- Take special care when coupling the machine to the tractor and uncoupling it from the tractor!
- Before starting work, make sure that the front axle of the tractor is sufficiently loaded! Always attach ballast weights correctly to the attachment point provided!
- Never leave the driver’s cab during the journey!
- Driving behavior, steering and braking capabilities are affected by attached or built-on equipment and ballast weights! Therefore always be sure the vehicle has sufficient steering and braking capabilities!
- Fully lower the machine before leaving the tractor and before performing any adjustment, maintenance and repair work! Switch off the engine, withdraw the ignition key and wait until all moving parts have come to a complete halt!
- No-one may enter between the tractor and machine unless the vehicle is secured against rolling away by application of the parking brake and/or insertion of chocks!
- Make sure that no-one can accidentally switch the machine on whilst adjustment, maintenance and repair work is being performed!

## 2.6.2 Mounting

- Before attaching the machine to the three-point suspension, or detaching it from it, move the control lever for the three-point suspension to the position where inadvertently raising or lowering it cannot be performed!
- When the three-point suspension is being used, the attachment categories of tractor and machine must always match or be compatible!
- There are crush hazards and laceration hazards in the area of the three-point linkage!
- When actuating the control levers for the three-point linkage never step between tractor and machine!
- Attach the spreader so that a minimum distance between the distribution hopper and carrier vehicle is at least **200 mm** at all times!
- In the transport position of the machine, always ensure that the tractor three-point linkage has sufficient lateral restraint!
- When driving on public roads with the equipment raised, the control levers for the three-point hydraulics must be locked to prevent lowering!

## 2.6.3 The spreader disc and ejection channel

The machine is equipped with a rotating distribution disc (1) which is largely covered by a safety guard (cover shield, 2).

Only in the areas of the material infeed and ejection can the distribution disc not be fully covered.




**⚠ WARNING!**

**If hands, feet or items of clothing come into contact with the rotating distribution disc, this can lead to serious injuries!**

- ▶ Operation without the cover guard is absolutely prohibited!
- ▶ It is prohibited to remain in the area where material will be spread or ejected when the distribution disc is running, even if no materials are being fed - there is a risk of injury due to the distribution disc itself or due to ejection of residual materials!
- ▶ Switch off the drive before attempting to remove any stones or pieces of frozen material that jam the distribution disc or block the ejection duct of the distribution hopper!
- ▶ Never reach on to the blocked distribution disc or into the ejection duct if the drive is switched on!

## 2.6.4 Maintenance

- Maintenance, repair and cleaning work, together with rectification of malfunctions and faults, may be performed only when the drive is switched off and the engine is stopped!
- Remove the ignition key!
- Regularly check nuts and bolts for tightness and tighten them if necessary!
- Never perform maintenance work on the spreader when it is raised!
- When exchanging work equipment, use appropriate tools and wear safety gloves!
- Dispose of oils, grease and filters in the correct manner!
- Before performing any work on the electrical system, always disconnect it from the power supply!
- If safety guards are subject to wear, check them regularly and replace them promptly
- Spare parts must at least comply with the technical standards specified by the device manufacturer! Using genuine spare parts ensures such compliance
- When performing electric arc welding on the tractor or attached equipment, disconnect the cable at the generator and at the battery!

## 2.6.5 Appearance (special equipment)

If the machine is equipped with the special fitting “Step on the hopper” (1), note the following:

- A maximum of one person may stand on the step!
- Do not stand on the step unless wearing safety shoes!
- It is prohibited to step on to the step in icy or snowy conditions - slip hazard!

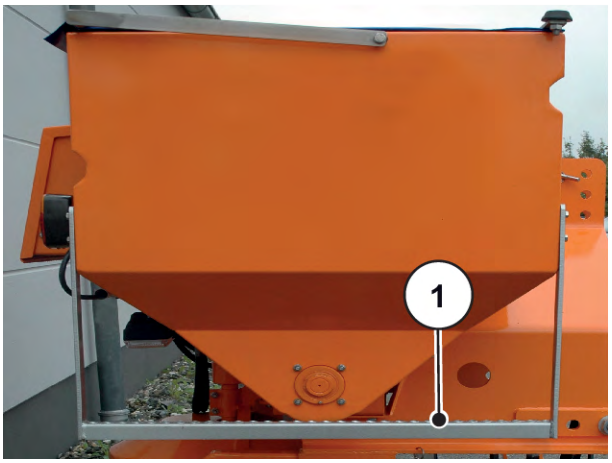


## 2.6.6 Conveyor screws

The machine operates with one conveyor screw (1) or for the double-chamber version, 2 conveyor screws.

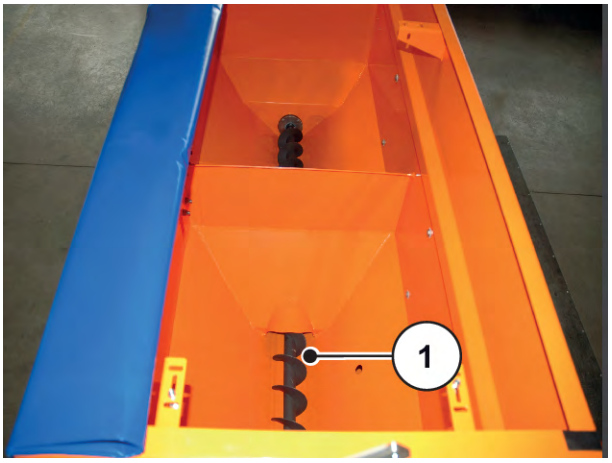

**⚠DANGER!**

**The conveyor screws can inflict very serious injuries of anyone who is caught up by them; in some circumstances leading even to fatal consequences.**

- ▶ Therefore when the machine is attached, never remove the safety covers!
- ▶ Always strictly comply with the following instructions: Never operate the automatic spreader with the safety covers removed! (see page 15, Fig. 1)

### 2.6.7 Electrical system

Unprofessional, negligent or grossly negligent operation of the machine, particularly when used in conjunction with defective cables and plug connections, can in some circumstances lead to scorching or even smoldering fires.

- Permit only qualified electricians to perform maintenance and repair of electrical equipment!
- Have loose cables and damaged cables replaced immediately!
- Use only original cables and fuses!

**⚠CAUTION!**

- ▶ Before performing maintenance and repair work, always disconnect the automatic spreader from sources of electric power (such as batteries).

### 2.6.8 Touching up the paintwork

- When the paintwork is being touched up, hazardous materials may be released by paint and cleaning agents. Ensure good ventilation.
- When performing grinding, take appropriate measures to prevent breathing in dust and detritus. Grinding dust is a health hazard!
- Vapors and gases can be capable of explosions! This is an injury hazard and burning hazard!

***NOTICE!***

**Be aware of the health protection instructions issued by the manufacturers of paints and cleaning agents, and comply with them!**

- ▶ Residues of paints are special waste and must be disposed of correctly by the user!

### 2.6.9 Protective clothing for operators

When operating the machine or performing maintenance on it, the skin may come into contact with hydraulic oils, greases, paint etc.

- When performing such activities on the machine, wear protective clothing!
- Refer to the safety precautions specified for the products with which the skin can come into contact!
- It is the responsibility of the operating company to ensure the availability of protective clothing.
- It is the responsibility of the operating company to check that protective clothing is being worn by operators and that the safety guards are fitted on the machine!

### 2.6.10 Storage

- Always park the supporting vehicle on a level and stable substrate! The slope of the ground must not exceed 7% or 4°, in order to avoid the vehicle drifting away (sliding) and subsiding.
- It is best to store the machine in a dry storage shed with its own parking arrangements.
- After the end of the winter season , the machine should be thoroughly cleaned of spreading salt (see *Chapter 6 - Maintenance, greasing and cleaning - Page 32*).

### 2.6.11 Transport and packaging for initial delivery

**⚠CAUTION!**

The machine can slip during transport!

▶ The machine must be secured with appropriate restraints so that it does not slip during transport!

▶ Comply with the instructions for securing it during loading!

Mostly the machine is secured on a wooden pallet for transport. This pallet is intended to be lifted using fork lift trucks. When using a fork lift truck, make sure it has sufficiently long forks and is rated at sufficient Safe Working Load!

**⚠CAUTION!**

**The machine may not be suspended with slings at the equipment safety cover or other points not designated for lifting the machine!**

## 2.7 Safety equipment, warnings and instructions

Various warning and instruction stickers are attached to the machine (for the position at the machine, please refer to *2.7.1 Position of guards and safety labels*).

The warning and instruction stickers are components of the machine. They must not be removed or modified.

▶ Replace missing or illegible warning and instruction stickers immediately.

If new components are installed during repairs, the same warning and instruction stickers that were on the original parts must be placed on the new parts.

The correct warning and instruction stickers can be obtained from the spare parts service.

Illustrations on the following pages show the guards and safety labels affixed to the machine. In addition you will find a checklist for checking these items.

Check the guards:
- before each spreading operation
- after each occasion of maintenance and repair

Check to ensure the following:
- they are in the correct condition
- they are in the correct position
- they are securely attached
- they satisfy the necessary function

- When performing these checks, refer to the checklist (see *Chapter 2.7.2 - Checklist for checking the guards - Page 17*).
- Rectify any faults before putting the machine into service!
- If whilst the machine is in operation a serious fault occurs, switch the machine off immediately and rectify the fault or contact a suitable repair workshop!
- Do not modify or remove any guards!
- Do not disable any guards by making modifications to the machine!

Safety stickers
- Check the safety stickers
- at short intervals of time for cleanliness and legibility
- If safety labels become damaged, replace them immediately!

## 2.7.1 Position of guards and safety labels

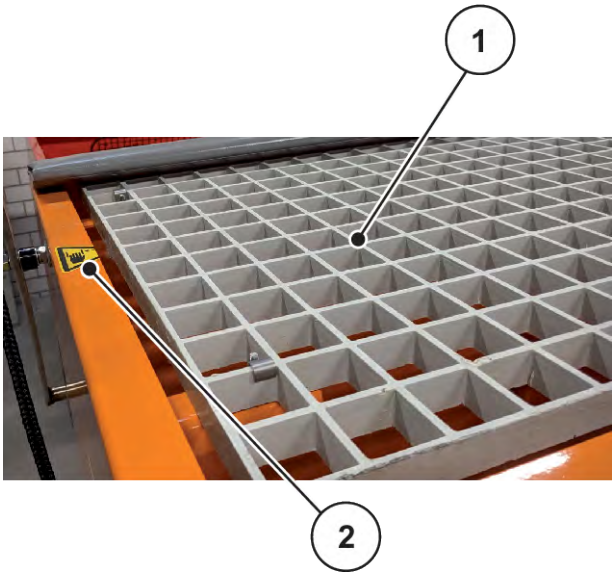


[1] Equipment safety cover

[2] “Crush hazard” sticker

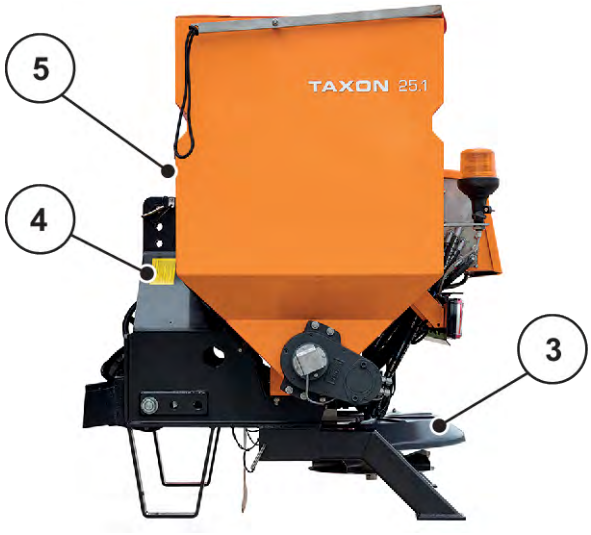


[3] Covering screen
[4] “Procedure when fitting” label
[5] “Before commissioning” label (on the left in the direction of travel)

(2) “Crush hazard” sticker



(4) “Procedure when fitting” label

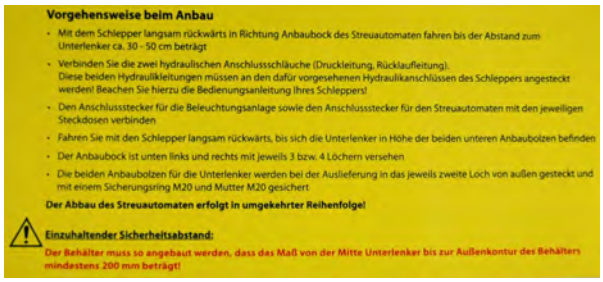


(5) “Before commissioning” label

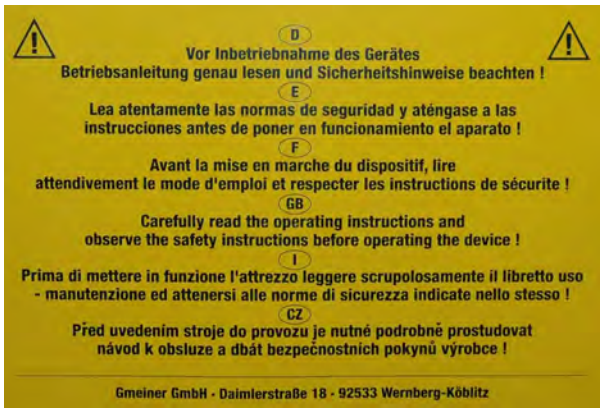

## 2.7.2 Checklist for checking the guards

Use the above list when performing the checks

| | Checked |
|---|---|
| The equipment safety cover (1) must be securely fastened to the material hopper! | |
| The “Crush hazard” sticker (2) must be attached in a clearly visible position close to the equipment safety cover! | |
| The “Before commissioning” label (5) must be attached at the position shown! | |
| The covering screen (3) must be bolted securely to the upper pipe of the spreader disc shaft, as a cover. The spreader disc must be attached with both screws!<br>There should be a clearance of about 1 cm between the spreader disc (upper edge of the disc ribs) and the lower face of the covering screen | |
| The “Procedure when fitting” labels (4) must be attached in a clearly visible position on the attachment head! | |

If one of more labels are no longer attached or are illegible, order new labels from the manufacturer and attach them!

Date of checking

Checked by (signature)

# 3 Technical specifications

| TAXON range | |
|---|---|
| Spreading width | 2 - 8 meters (in 0.5 meter steps) |
| Dry material as the spreading material | Grit: 10 to 250 g/m²<br>Salt: 5 to 40 g/m² |
| Drive | Fully hydraulic drive for the conveyor screw and the spreader disc<br>Particulars of the vehicle hydraulics |
| Oil requirement | 60 l/min must not be exceeded! |
| Pressure cut-out | 190 bar |
| Control desk | Path tracking by controller EcoTron |
| Noise information | The sound pressure level at the driver's place of work, measured in dB (A), depends on the machine model and the type of supporting vehicle.<br>The noise of the machine does not increase the noise level at the driver's place of work |
| Vibration data | Applicable limit values:<br>• 2.5 m/s2 for the upper limbs<br>• 0.5 m/s2 for the lower limbs<br>The effective values are lower than the applicable limit values |

| | TAXON 25.1 | TAXON 30.1 |
|---|---|---|
| Dry material volume | 1.5 m³ | 2 m³ |
| Depth of the hopper | 807 mm | 1207 mm |
| Width of the hopper | 2000 mm | 2000 mm |
| Center of gravity [1] | 748 mm | 615 mm |
| Height of the side wall | 1130 mm | 1382 mm |
| Empty weight | 463 kg | 535 kg |
| Salt as the spreading material | 5- 40 g/m² | 5- 40 g/m² |
| Grit/sand as the spreading material | 10- 250 g/m² | 10- 250 g/m² |
| Spreading width | 2 - 8 m | 2 - 8 m |

[1)] Distance of the rear wall of the hopper (spreader disc side) from the center of gravity

# 4 Coupling and uncoupling

## 4.1 Preparation for initial attachment to the supporting vehicle

If the machine has been delivered by a carrier, various small parts are packed as secure packages within the material hopper.

At initial attachment the material hopper must be completely empty. To do this, release the lashing straps that bind the automatic spreader to the wooden pallet. Then remove the equipment safety cover (see *Chapter 2.7.1 - Position of guards and safety labels - Page 15*) and completely empty the material hopper!

**⚠CAUTION!**

- After this, reinstall the equipment safety cover ion its correct position!

## 4.2 Parking supports

The machine is delivered from the factory with standard parking supports (two parking support feet); these are capable of supporting the weight of the unladen machine.

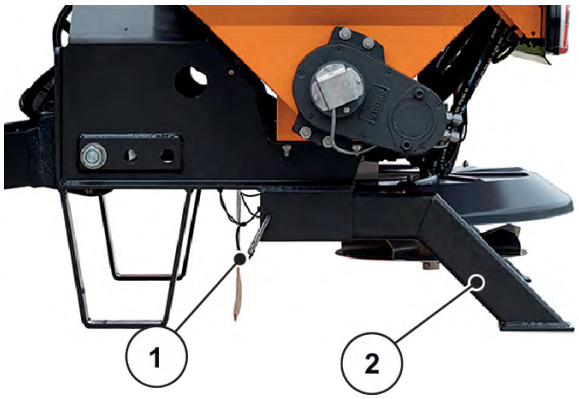


The parking support feet are not adjustable for height. There is a locking pin (1) on the parking support foot (2). This secures the parking support foot to the guide pipe of the attachment head.

The parking support feet are designed to take the weight of the unladen spreader.

The two feet together can accept the weight of the unladen spreader.

**⚠CAUTION!**

- The machine may be parked on the factory-supplied parking support feet only when it is unladen!
- Never go underneath the parked machine!
- Park the machine only on a level and stable substrate!
- Store the parking support feet only when laid flat, otherwise there is a trip hazard!
- Unauthorized modifications of the parking support feet are prohibited!

## 4.3 Installation of the electronic control desk with wiring harness

### 4.3.1 Control desk

- ▶ Install the control desk in the cab using the holder supplied so that the user can easily reach and read the control desk even during the journey.
- ▶ The control desk can be connected to the on-board vehicle power supply, either at 12 Volt or at 24 Volt. The corresponding solenoids (12 V or 24 V) must also be mounted on the hydraulic valves. The voltage is shown on the rating plate.
- ▶ For this see also the separate operator's manual for the control desk EcoTron.




[1] Control desk EcoTron

### 4.3.2 Connection cable

See the separate operator's manual for the respective control desk.

### 4.3.3 Battery connection cable

See the separate operator's manual for the respective control desk.

### 4.3.4 Drive impulse connection cable

See the separate operator's manual for the respective control desk.

### 4.3.5 Connection cable to the spreader

See the separate operator's manual for the respective control desk.

## 4.4 Structure of the three-point attachment point at the rear

Machines of the TAXON range are suitable for connection to all tractors that are fitted with standard three-point connection points.

The two lower attachment pins have a diameter of 28 mm and thus are arranged for connection to tractors of category 2. The pin of the upper link arm has a diameter of 22 mm.

### 4.4.1 Procedure for attachment

- ■ ***Attachment head with attachment pins***

- Drive the tractor slowly in reverse towards the attachment head (1) of the machine until the distance to the lower link arm is approx. 30 - 50 cm.
- Connect the two hydraulic connection hoses (pressure supply and return). These two hydraulic lines must be connected to the hydraulic connections provided for them on the tractor! For this purpose, refer to the operator's manual for your tractor!




- Plug the connector for the lighting system and the connector for the machine into the respective sockets.
- Drive the tractor slowly in reverse until the lower link arms are at the height of the lower attachment pins (2).
- The attachment head (1) is provided with 3 and 4 holes on the left and right respectively.
- The two attachment pins (2) for the lower link arm are both inserted into the middle hole or both into the second hole from the outside, and secured with an M20 Circlip and an M20 nut.

**⚠CAUTION!**

**Before each spreading operation, check the M20 nut for secure seating!**

**A safety distance of 20 cm at the closest point must be maintained between the attachment head and the tractor! If necessary, move the attachment pins forwards!**

If this safety distance is not maintained, the permit to use the equipment becomes invalid!

■ ***Securing the lower link arms***

- Attach the two lower link arms (1) of the tractor to the attachment pins of the machine and secure them with cotter pins.
- If the tractor is fitted with a quick-change device, the tractor ends of both the upper link arm capture balls (2) are pushed on to the attachment pins (3) and are secured with the cotter pins

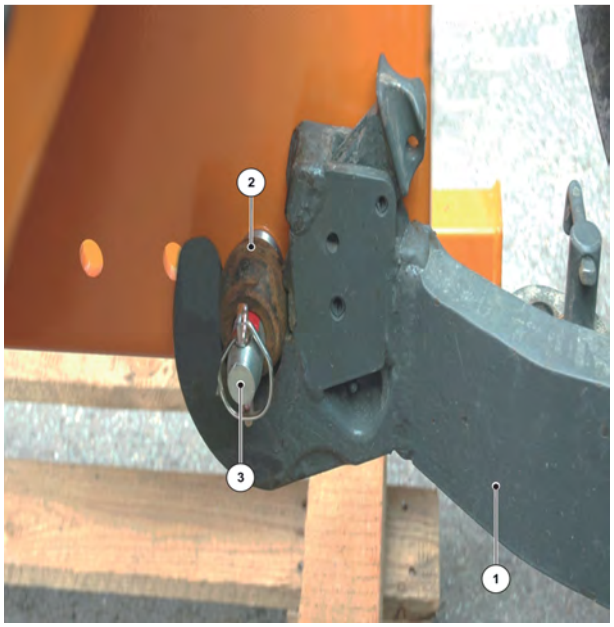

**⚠CAUTION!**

After the lower links arms have been attached, be sure to secure the attachment pins with cotter pins!

The relevant securing system of the lower link arm must engage and click home!

(See operator's manual for the tractor)

■ ***Securing the upper link arm***




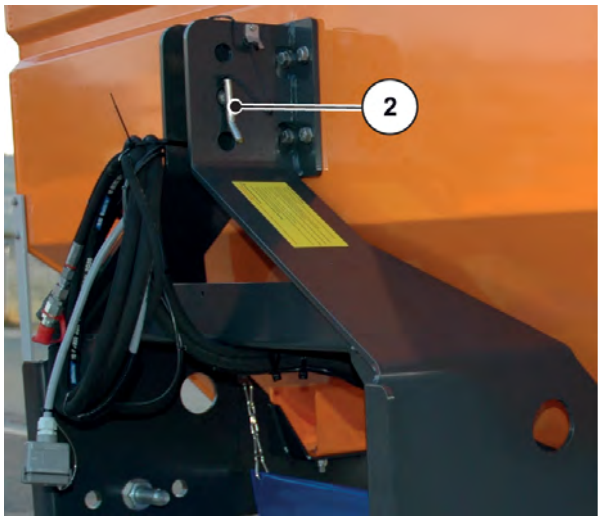


▶ Attach the upper link arm (1) of the tractors to the upper attachment pins (2) of the machine, and insert a cotter pin (3) to secure it.

▶ Please make sure that the securing chain connects the pin to both the cotter pin and the attachment head!

▶ If the tractor is fitted with a quick-change device. The tractor end of the upper link arm capturing ball is pushed on to the attachment pin and is secured with the cotter pin

**⚠CAUTION!**

After the lower links arms have been attached, be sure to secure the attachment pins with cotter pins!

The relevant securing system of the lower link arm must engage and click home!

(See operator's manual for the tractor)

***NOTICE!***

**When the machine is in spreading operation (spreader disc about 40 cm above the surface) it must stand absolutely straight.**

- ▶ The adjustment, the attachment head has a set of six or three holes for the attachment of the upper link arm.

- ▶ Associated with the additional facility to adjust the length of upper link arm itself, the machine can be brought into a straight position.



*Fig. 1: The machine is correctly positioned and the upper link arm is correctly adjusted*

■ ***Connection to the vehicle hydraulics***

The tractor must be able to provide a sufficient hydraulic supply for the machine (40 liters/min at 190 bar pressure).

There are two hydraulic connection ports provided on the machine - a pressure supply and return. These two hydraulic lines must be connected to the hydraulic connections provided for them on the tractor! For this purpose, refer to the operator's manual for your towing machine!

**⚠CAUTION!**

**Couple and uncouple hydraulic hoses only when they are cool and depressurized!**

- ▶ Make sure that the plug couplings are entirely clean!
- ▶ After the plug couplings have been uncoupled, make sure that the hydraulic ports or both lines are securely capped with protective caps!
- ▶ When making the couplings, always connect the return line first!

■ ***Connecting the lighting connector and the spreader connection cable***

Plug the connector for the lighting system (2) and the connector for the machine (1) into the respective sockets.

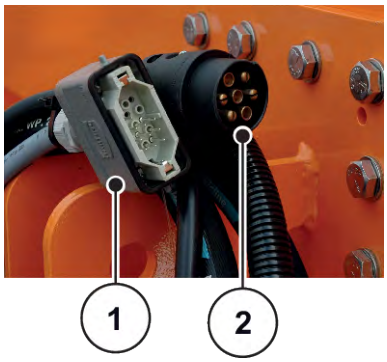


**⚠CAUTION!**

**When these are disconnected, make sure that the plugs and sockets are securely capped with closure plugs!**

## 4.5 Safety distance to be maintained

**⚠DANGER!**

**The hopper must be attached so that the dimension from the center of the lower link arm from the center of the outer contour of the hopper is at least 200 mm!**

If the hopper is closer than this, the safety-relevant distances will be undershot. This can lead to very serious injuries such as crushing the body when the machine is being attached and detached!

- ▶ If this safety distance is not maintained, the permit to use the equipment becomes invalid!

## 4.6 Removal of the standard parking support feet and the wooden transport pallet

- After these have been removed, attach the machine to the tractor by slightly lifting the three-point attachment.
- Now pull the wooden transport pallet supplied out from under the spreader.




*Fig. 2: Safety distance: at least 200 mm*

**⚠ WARNING!**

**Never reach underneath the raised machine!**

- The machine is delivered from the factory with standard parking supports (two parking support feet, 2); these are capable of supporting the weight of the unladen machine.
- The parking support feet are not adjustable for height.
- There is a locking pin (1) on the parking support foot. This secures the parking support foot to the guide pipe of the attachment head.
- Hold the parking support foot with one hand, without the safety pin using the other hand and allow the parking support foot to fall away.

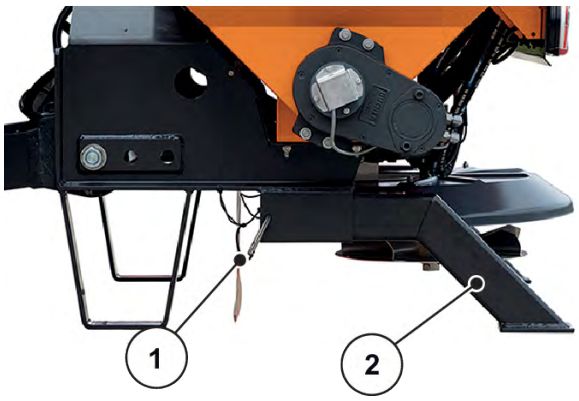

**⚠ WARNING!**

- The machine may be parked on the factory-supplied parking support feet only when it is unladen!
  Comply with the safe working load of the parking support feet!
- Never go underneath the parked machine!
- Park the machine only on a level and stable substrate!
- Store the parking support feet only when laid flat! Trip hazard!
- Unauthorized modifications of the parking support feet are prohibited!
- Never reach underneath the raised machine or go under it!

## 4.7 Correct working height

- The working height is set correctly when the spreader disc is between 35 cm and 45 cm above the substrate.
- In this position the material hoper should be absolutely straight in line with the towing vehicle.




*Fig. 3: Working height: Spreader disc 35 cm to 45 cm above the substrate*

## 4.8 Safety bars

- The machine is equipped as standard with two safety bars (1).
- If the machine when attached (and with the parking support feet not fitted) should accidentally or because of some technical issue fall on to the substrate, these bars prevent damage to the spreader disc, covering screen or other parts of the machine.

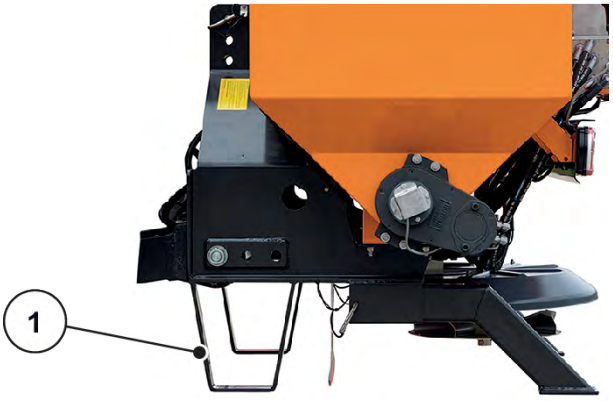

**⚠CAUTION!**

**When parking the machine, always fit the parking support feet**

## 4.9 Uncouple the machine

**Detaching the machine is performed in the reverse sequence of operations:**

- ▶ Attach the left and right parking support feet to the machine, and slide the safety pins into place.
- ▶ BY operating the tractor's hydraulic system, allow the machine to settle down on to the substrate. Attention! Make sure that no-one is standing at the machine!
- ▶ Switch off the vehicle, depressurize the hydraulic hoses, remove the ignition key!
- ▶ Disconnection the connection cable between the machine and the lighting connector.
- ▶ Remove the hydraulic hoses.
- ▶ Remove the upper link arm.
- ▶ Remove the two lower link arms.
- ▶ Drive the tractor away forwards.

**⚠CAUTION!**

- ▶ The machine may be parked on the factory-supplied parking support feet only when it is unladen. Comply with the safe working load of the parking support feet!
- ▶ Never go underneath the parked machine!
- ▶ Park the machine only on a level and stable substrate!
- ▶ Couple and uncouple hydraulic hoses only when they are cool and depressurized!

# 5 Commissioning

## 5.1 Starting the vehicle and bringing the spreader into operation

- Check the machine for safety by reviewing the items on the checklist (see *Chapter 2.7.2 - Checklist for checking the guards - Page 17*).
- Start the vehicle and bring the hydraulics into operation.
- Switch on the control desk in the cab. The spreading values most recently used (quantity and width) will be shown in the display (see also the accompanying operator's manual for the respective control desk).
- Adjust the spreading quantity and spreading width if necessary. When the vehicle starts away, the vehicle speed is shown in the display and the spreading will start.

*After you have switched on the vehicle hydraulics and set the spreading width, the spreader disc will start to rotate, even if the tractor is still stationary.*

*The conveying screw will start to rotate only once the supporting vehicle is in motion and the vehicle speed is shown in the display, or stationary spreading is activated.*

## 5.2 Setting the spreading distribution

The spreader unit is attached to the clamping clip on the covering screen by means of two screws.

The machine is equipped as standard with a manual spreading distribution adjustment.

On request however an electronic spreading distribution adjustment (ESBV) can be supplied; this allows convenient adjustment of the spreading distribution directly from the control desk.

### 5.2.1 Manual spreading distribution adjustment

- To adjust the spreading distribution, the clamping screw (1) on the spreader unit must be loosened.
- The spreader unit can be adjusted clockwise or anti-clockwise. The spreading distribution is automatically adjusted either to the left or to the right, depending on which way the unit is turned.

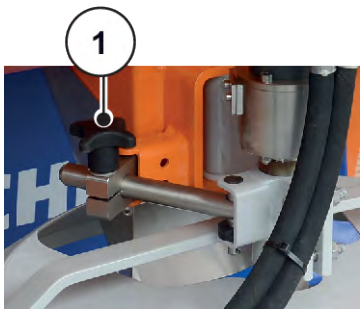


*Fig. 4: Manual spreading distribution adjustment*

### 5.2.2 Electronic spreading distribution adjustment (optional feature)

▶ See the separate operator's manual for the respective control desk.



*Fig. 5: Electronic spreading distribution adjustment*

### 5.2.3 Graphical representation of the spreading distribution

The direction of travel is shown with the arrows.

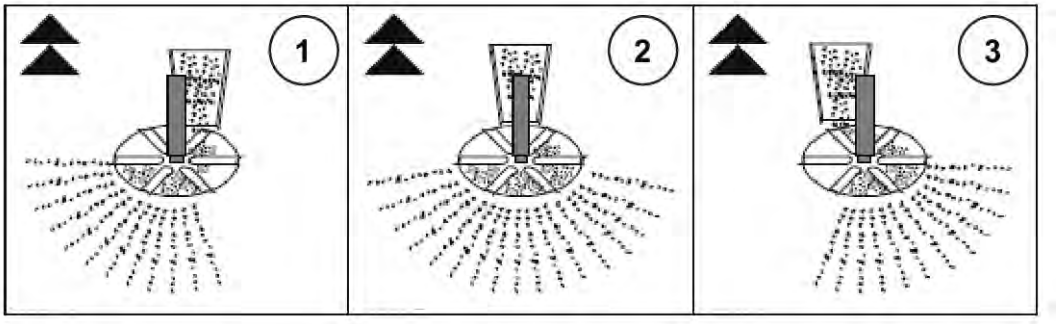


*Fig. 6: Electronic spreading distribution adjustment*

[1] If the material strikes the spreader disc to the right of the spreader disc shaft, the spreading material will be ejected to the left in the direction of travel

[2] If the material strikes the spreader disc in front of the spreader disc shaft, the spreading material will be ejected equally to the left and to the right

[3] If the material strikes the spreader disc to the left of the spreader disc shaft, the spreading material will be ejected to the right in the direction of travel

**⚠WARNING!**

**Risk of injury due to being struck by the spreading material!**

▶ Before manual adjustment of the distribution pattern is performed, the material feed must be switched off.

## 5.3 Operating the manual controls

In the event that the electronic control desk should fail on any occasion, the machine can also be operated by means of the manual controls (emergency manual operation of the hydraulic valves, 1).

The necessary spreading quantity and spreading width can be set using the black rotary knobs of the (emergency manual controls of the hydraulic valves) so that sufficient spreading material is ejected over a sufficient width. The valves for the spreading quantity and the spreading width are marked with appropriate stickers.




*Fig. 7: Hydraulic block SRCA 2-way*

The consumers are switched on and off by switching the hydraulic supply on the supporting vehicle. In normal spreading operation the back rotary knobs of the emergency manual operation must always be set to “0”, otherwise the screw shaft and the spreader disc cannot be regulated by the electronic control desk!

## 5.4 Instructions for the hydraulic system

The hydraulic control block is fitted with a overpressure valve.

The pressure is factory-set to 190 bar. This value must not be changed!
With normal free-flowing spreading material, the machine operates at a pressure significantly less then this.

**⚠ DANGER!**

**The hydraulic system is designed to operate at a power of 50 l/min. The maximum power must not be allowed to exceed 60 l/min!**

Hot hydraulic oil can lead to serious scalding and other serious injuries!

- ▶ When machines are connected to the hydraulic system of the vehicle, carefully check the operator's manual of the supporting vehicle to ensure that there is sufficient hydraulic oil in the hydraulic oil tank!

## 5.5 Emptying the hopper when stationary

**To empty the hopper when stationary, proceed as follows:**

- ▶ Comply with all warning instructions. See *Chapter 2 - Safety - Page 6*
- ▶ Park the tractor on a level and stable substrate. Make sure that the handbrake is applied.
- ▶ Emptying the hopper is generally performed at a salt loading station, where the spreading material can be re-used.
- ▶ Switch the vehicle hydraulics on.
- ▶ Switch the control desk off.
- ▶ Go round the back of the automatic spreader and open the cover of the hopper on the machine.
  Alongside the hydraulic block you will find the relevant manually operated valves.



*Fig. 8: Hydraulic block SRCA*

**⚠CAUTION!**

Risk of injury due to the rotating spreader disc

Risk of dirty clothing due to the rapid outflow of the spreading material

- ▶ Stand to one side some distance away from the spreader disc before you actuate the hydraulic controls!

- ▶ Slowly open the manually operated valve for the “Emergency manual operation of salt”. The screw will start to rotate and salt will flow on to the spreader disc.
- ▶ Slowly open the manually operated valve for the “Emergency manual operation of salt” (about step 3). Because the spreader disc is turning only slowly, the spreading material is deposited over only a small area.
- ▶ Once the hopper has been emptied, return all manually operated valves back to “Zero”.
- ▶ Close the cover of the hopper.

# 6 Maintenance, greasing and cleaning

**⚠ WARNING!**

- ▶ Throughout all maintenance, greasing and cleaning operations on the machine, the drive from the tractor must be switched off!
- ▶ Apply the safety instructions and actions for prevention of accidents!

Throughout the winter road maintenance operations the machine is largely maintenance-free.

Nevertheless some regular checks and a certain amount of basic care is fundamental to retention of the value of the machine!

## 6.1 Greasing the spreader disc shaft

The spreader disc shaft (1) is designed so that there is no need to grease it, i.e. it is absolutely maintenance-free.

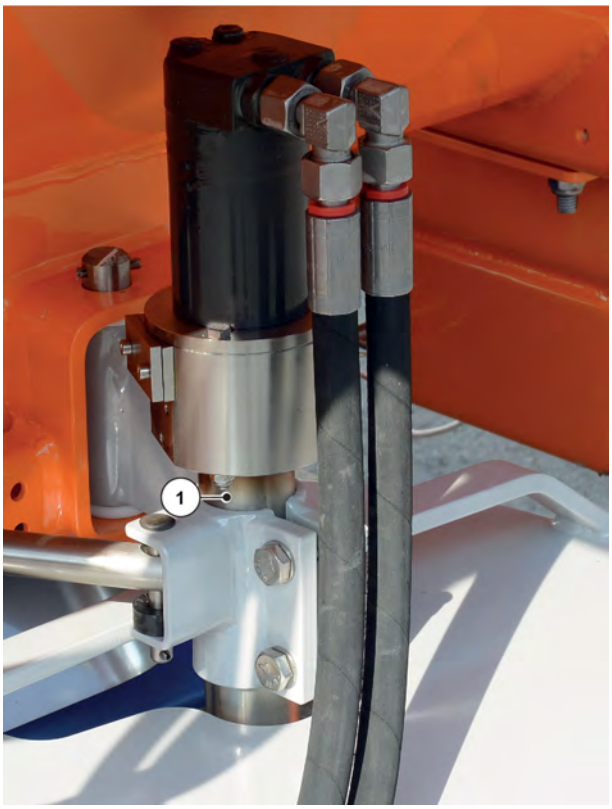


[1] Spreader disc shaft

## 6.2 Chain drive for the conveyor screw

The chain drive for the conveyor screw is filled with commercially available fluid grease and thus it is largely maintenance-free.

- Filling level: 0.5 liters of fluid grease for gears
- Fluid grease change: every 5 years




**NOTICE!**

**Environmental protection**

▶ The used fluid grease must be collected in suitable containers and disposed of responsibly (Waste Materials Disposal Act)!

## 6.3 Check the hydraulic oil hoses

**Check the following points:**

▶ Is any damage to the outer covering,such as cracks, kinks, cuts, chafing, embrittlement, etc. evident?

▶ In the depressurized state or pressurized state, does the hose exhibit any deformation?

▶ Are there any leaks between the hose and the attachment fittings? Is the hose moving away from the attachment fittings?

**⚠CAUTION!**

**If any damage is evident, exchange the affected hoses immediately!**

If a hydraulic hose bursts it can cause serious injuries to personnel and serious damage to the machine and the environment!

▶ Comply strictly with the safety regulations for hydraulic hoses issued the by Trade Association!

▶ Hydraulic hoses should not be kept in use for longer than six years!

▶ Hydraulic hoses should be checked by a qualified specialist at least once every twelve months.

## 6.4 Cleaning the machine

It is good practice alter each spreading operation to wash the machine with fresh water (not pressurized) to remove residues of salt. Do not use chemical cleaning agents!

- ▶ When cleaning the machine, do not resort to using high-pressure cleaners, since these are liable to damage the paintwork and penetrate the cable glands on electronic components!
- ▶ The manufacturer declines all responsibility for damage resulting from disregard of the above instructions.
- ▶ When cleaning the machine, take care not to damage any warning labels or other labels! If any warning labels or other labels go missing, replace them without delay!
- ▶ Clean the machine only at a designated washing station that is equipped with oil traps!

## 6.5 Cleaning stainless steel and caring for it!

The corrosion resistance of these materials is primarily achieved by the addition of alloy elements such as chromium, chromium-nickel etc. This does away with the need for protective treatment in the form of paint finishes or special surface treatment. When exposed to the atmosphere, unpainted metal parts of stainless steel form a thin surface layer of oxide (passivation) which in addition provides protection against corrosion.

To exclude the operation of damage mechanisms, periodic care of parts of stainless steel is recommended.

The table below offers an overview of the most frequently encountered causes of contamination, and gives instructions on cleaning methods.

| Type of contamination | Cleaning | Special agents | Note |
|---|---|---|---|
| Dust, soot | Wipe off with soft dry cloths, rinse with water (dry off as necessary) [2] | | To avoid water spotting |
| Fingerprints<br>Light spotting with oil and grease<br>Dry fly ash<br>Encrustations of road salt | Washing with household cleaners (without scouring additives)<br>Washing down the water (drying) [2] | Ambra, Lux Liquid, Vif, Flupp, Inox Clean, Inox Protect | Hard water can leave check marks - a small amount of added vinegar in the rinsing water may help |

[2)] Rinsing with hot water and application of pressure generally achieves a better cleaning effect

| Type of contamination | Cleaning | Special agents | Note |
|---|---|---|---|
| Residues of coating films<br>Grease pencil markings<br>Lead pencil markings<br>Company imprints<br>Paint sprays<br>Brazing fluxes (without discoloration) | Wash off with organic solvents such as toluene, xylol, carbon tetrachloride, chloroform or mineral oil distillates such as petrol (lead-free), cellulose thinners, acetone, methyl ethyl ketone, perchloroethylene, alcohol etc. | Inox Clean, Inox Protect | These substances create flammable vapors.<br>**ATTENTION: Use only in well ventilated rooms!** |
| | Cleaning, as above.<br>Application of preservatives containing light oil or wax | Chromking, Dag Chromium oil - chromium steel care products<br>Inox Clean, Inox Protect | The surface will be rendered immune from further contamination.<br>The protection must be reapplied periodically. |
| Strongly adhering contamination<br>Splashes of concrete, plaster<br>Weld discoloration (partially) | Wash with cleaning agent including scouring powder<br>Wash down with water [3]<br>Dry off | Ajax, Vim etc. | This process is unsuitable for surfaces 2D, 2B or BA, since the scouring power will remain as a residue |
| | Cleaning using a nylon fabric (if desired with aluminum oxide coating, with addition of water, organic or mineral solvents) | Scotch-Brite | Ground or brushed surfaces must always be worked in the direction of finishing. |
| | Cleaning with abrasive cloth and brushes.<br>Thorough cleaning with water [3] (apply pressure as necessary (to avoid (external rust) | | **ATTENTION: Use only brushes with non-rusting bristles (external rust)** |

[3)] Rinsing with hot water and application of pressure generally achieves a better cleaning effect

| Type of contamination | Cleaning | Special agents | Note |
|---|---|---|---|
| Discoloration due to welding<br>Brazing material (with discoloration already)<br>Rust film<br>Heavy rusting<br>External rust<br>Scratches | Electrolytic cleaning: treat with mordant Antox 71E | Antox 71E<br>ARMCO<br>Durco | |
| | Some combination (cleaning with nylon fabric/ abrasive cloth and brushes) may achieve success. Restoring the visual appearance of external surfaces: Pickling with 20% nitric acid or phosphoric acid, rinsing off [4] | Antox 71E | Essential that this is neutralized with water |

* generally contains sulfur and phosphorus, therefore has a highly corrosive effect. Leads to pitting (type 304)

** contains chlorine, highly corrosive when wet (type 304 - pitting)



The above listed cleaning and care products should always be used separately from each other!

These cleaning products are available through specialist trade outlets.

Adherence to these care guidelines is a necessary pre-condition for any claims under warranty for corrosion damage and rusting through!

- Therefore such claims often require an inspection visit! Remove rust film deposits immediately!
- Thorough cleaning and maintenance must be performed 1x annually at the end of the spreading season and regularly during the season.
- **If these points are contravened, no claims under warranty will be accepted!**
- **No warranty claims for damage or impairment to the surface due to external influences will be accepted!**

## 6.6 Electrical system

The electrical system of the machine is largely maintenance-free.



If the plug connections in the wiring harnesses have not been parted and made for a long time, lightly grease them with acid-free grease (Vaseline)

[4]) Rinsing with hot water and application of pressure generally achieves a better cleaning effect

- Do not use contact spray or similar lubricants!
- When the machine is detached, make sure that the plug and socket of the cable connector are securely capped with the respective protective caps.
- At regular intervals, check the wiring harness connector and the distribution box for the presence of moisture!
- After the end of the spreading season, remove the control desk from the cab and store it in a dry place where it is not exposed to direct sunlight!
- Lay the connecting cables in the cab so that they cannot be crushed, or damaged in any other way!

## 6.7 Flange bearings

At the side opposite the chain drive, the conveyor screw is mounted in a flanged bearing (1). This flanged bearing has a grease nipple (2).

- Greasing interval: weekly
- Type of grease: acid-free grease

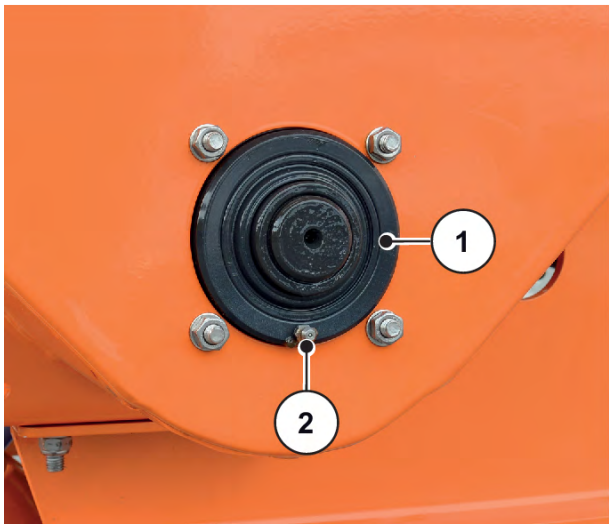

## 6.8 Hydraulic diagram

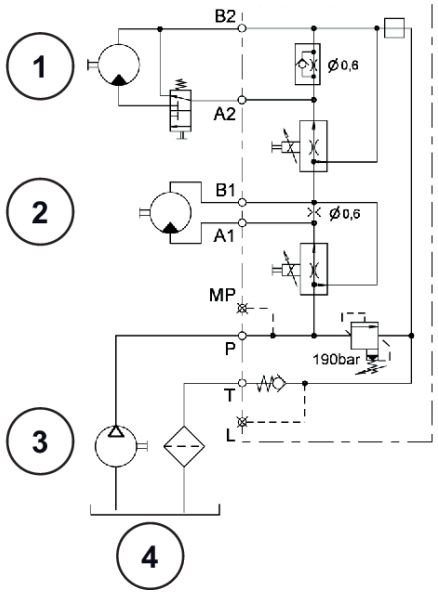


*Fig. 9: Hydraulic block “SRCA” 8m 2-way*

[1] Disc
[2] Screw
[3] Hydraulic pump
[4] Oil tank

# 7 Faults and possible causes

If faults arise on the machine, there can of course be a variety of causes.

The basic assumption is always that there is sufficient electrical power available and sufficient hydraulic power available.

- ▶ Rectify a fault by determining the cause, working only with the drive switched off.
- ▶ Comply with the point “Safety” (see *Chapter 2 - Safety - Page 6*)
- ▶ Reinstall any guards that have been removed, and check them according to the checklist (see *Chapter 2.7.2 - Checklist for checking the guards - Page 17*).

## 7.1 Faults that you can rectify yourself

**Control desk**

| Fault | Possible cause | Measure | Comment |
|---|---|---|---|
| Control desk will not switch on | Plug connectors not inserted | Insert them | **The spreader can still be operated using the emergency manual operation!** |
| | Power supply not connected | Connect | |
| | Fuse in the distribution box defective | Exchange the 20-Ampere fuse | |
| | Flying fuse on the battery cable defective | Exchange the 15-Ampere fuse | |
| | Cable damaged (may be chafed) | Exchange it | |
| | Control desk defective | Send it back to the factory | |
| No speed reported at the control desk | Drive impulse cable damaged | Exchange it | **Spreader in operation with the function “Stationary spreading” (30 km/h)!** |
| | Cable not connected to the C3 signal | Connect it as shown in the circuit diagram | |
| | Hall sensor (if fitted) not connected or inverted | Check it or exchange it | |
| | Triplex (if fitted) defective | Exchange it | |

**Spreader disc (message in the display: “Check disc”)**

| Fault | Possible cause | Measure | Comment |
|---|---|---|---|
| The spreader disc does not rotate at all | Spreader disc swung up | Swing it down | **In operation the spreader can still be driven using the emergency override program at the control desk. If the solenoid is de-energized, the spreader can still be driven using the emergency manual operation.** |
| | LED of the electronic disc switch-off does not light up | Check the position setting or exchange the probe | |
| | No hydraulic pressure available | Check the hydraulic system | |
| | The overpressure cartridge has tripped (blocked spreader disc) | Resolve the fault<br>Free the disc | |
| | Hydraulic valve defective | Exchange it | |
| | Solenoid of the hydraulic valve de-energized | Check it or exchange it | |
| The spreader disc always rotates at the same speed | Pressure compensator in the hydraulic valve stuck | Clean the valve | |
| | Disc probe for feedback defective | Exchange the probe | |

**Conveyor screw (message in the display: “Check the screw”)**

| Fault | Possible cause | Measure | Comment |
|---|---|---|---|
| Conveyor screws not running | No hydraulic pressure available | Check the hydraulic system | **In operation the spreader can still be driven using the emergency override program at the control desk.** |
| | Solenoid of the hydraulic valve de-energized | Check the power supply | |
| | Hydraulic valve defective | Exchange the valve | |
| | The overpressure cartridge has tripped - blocked screw | Check the pressure<br>Remove the foreign bodies | |
| | Blocked ejection channel | Clear the channel | |
| | No drive impulse at the control desk | Check the drive impulse connection<br>Switch on stationary spreading | |
| The conveyor screw always turns at the same speed | Pressure compensator in the hydraulic valve stuck | Clean the valve | |
| | Screw monitoring defective | Exchange the screw monitoring | |
| Conveyor screw cannot be stopped | Emergency manual operation of the hydraulic valves open | Close the emergency manual operation | |
| | “Stationary spreading” or “Emptying” buttons switched on at the control desk | Switch off the function at the control desk | |
| | Pressure compensator in the hydraulic valve jammed | Clean the hydraulic valve | |
| Display “Fill Level” | At the same time the respective LED alongside the buttons “Salt” or “Moist salt” flashes<br>This means that in this zone the spreading material is empty | Reload with material | |

| Fault | Possible cause | Measure | Comment |
|---|---|---|---|
| The “Salt” fill level display no longer goes dark | Measurement probe in the material hopper defective or requires adjustment | Exchange it | |
| | Measurement probe stuck | Clean the ceramic head | |

**Hydraulic system**

| Fault | Possible cause | Measure | Comment |
|---|---|---|---|
| The overpressure cartridge in the control block trips | Conveyor screw blocked by stones, frozen fragments of material, etc. | Remove the foreign bodies | |
| | Chain in the drive transmission broken | Exchange the chain | |
| | Bearing in the screw defective | Exchange the bearing | |
| | Spreader disc blocked | Clear access to the spreader disc | |

**Electronic control unit (infra-red - ESK)**

| Fault | Possible cause | Measure | Comment |
|---|---|---|---|
| The electronic control unit (ESK) reports “no material” | Dirty lens | Clean the lens | |
| | Sensor distance incorrect | Calibrate the sensor distance | |
| | LED does not light | Replace the sensor | |

## 7.2 Graphical and photographic representation of components

### 7.2.1 Level sensor





The empty sensor is positioned at the rear of the machine of the left near the spreader unit.

If the material hopper is empty the empty sensor reports this to the control desk in the cab.

The message “FILL LEVEL” appears in the display on the control desk.

The empty sensor is factory-set to operational status. Because of different or variable spreading materials it can however happen that the sensor requires adjustment, because it is failing to report an empty hopper or it reports an empty hopper when the machine is fully laden.

- ▶ To adjust the empty sensor, first swing up the cover (1) of the adjustment screw, then use a small screwdriver to adjust the sensitivity of the sensor by turning the adjustment screw.
- ▶ Turning the adjustment screw clockwise increases the sensitivity, turning it anti-clockwise decreases the sensitivity.

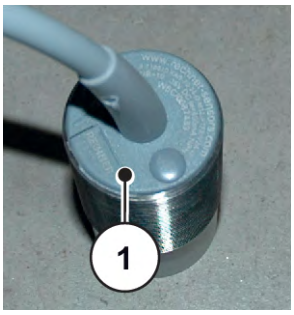


*The green LED on the sensor must light up when the hopper is empty and go out when the hoper is full.*

## 7.2.2 Hydraulic valve with pressure compensator

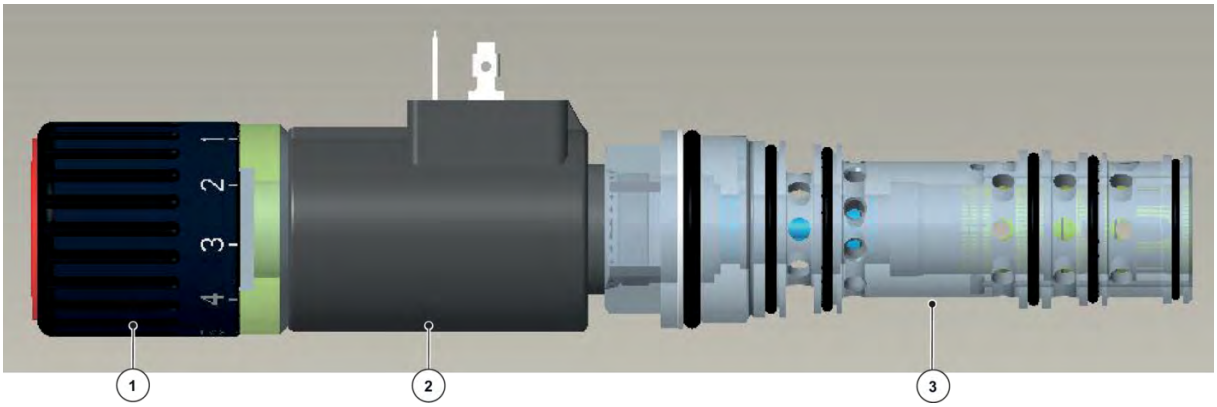


[1] Emergency manual operation
[2] Solenoid block
[3] Screw-in cartridge

Dismantling the hydraulic valve requires the utmost care, lest small components such as pins, O-rings etc. become lost or become damaged. Ensure the utmost cleanliness!

**⚠CAUTION!**

- ▶ Dismantle the valve only when it is cold and depressurized!
- ▶ Be aware of the warning instructions in the Hydraulics chapter.

## 7.2.3 Electronic control unit (infra-red - ESK)

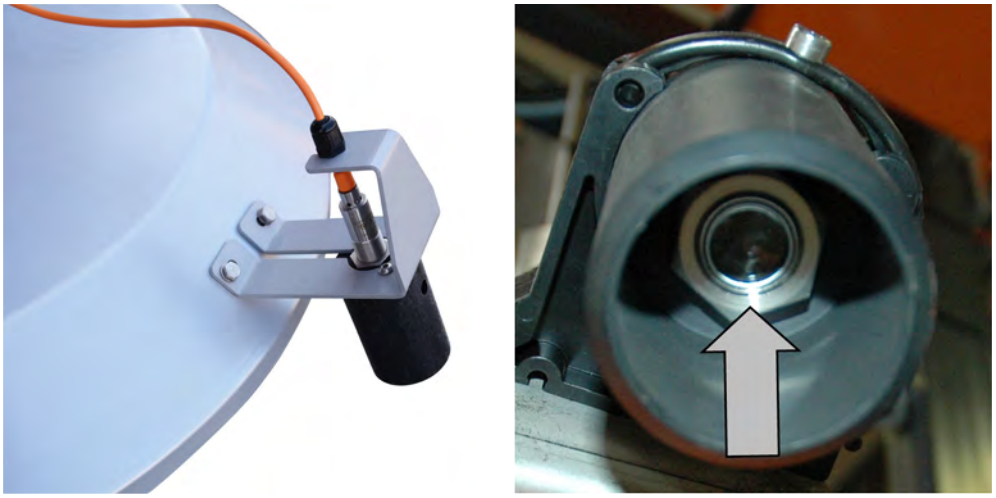

Before each spreading operation, clean the sensor with a damp cloth.

Adjusting the measuring field of the infra-red spreading controller:

The hydraulics must be switched off for the adjustment!

■ ***Type A***

▶ Switch on the EcoSat or EcoTron controller.

▶ Place a sheet of white paper about 25 cm in front of the spreading controller.

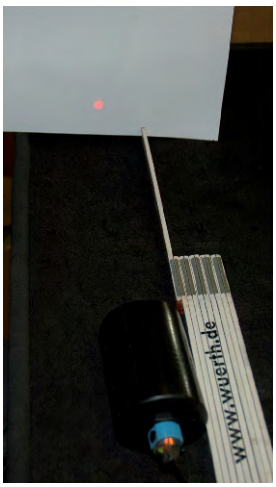


▶ Use the screw to set the distance.

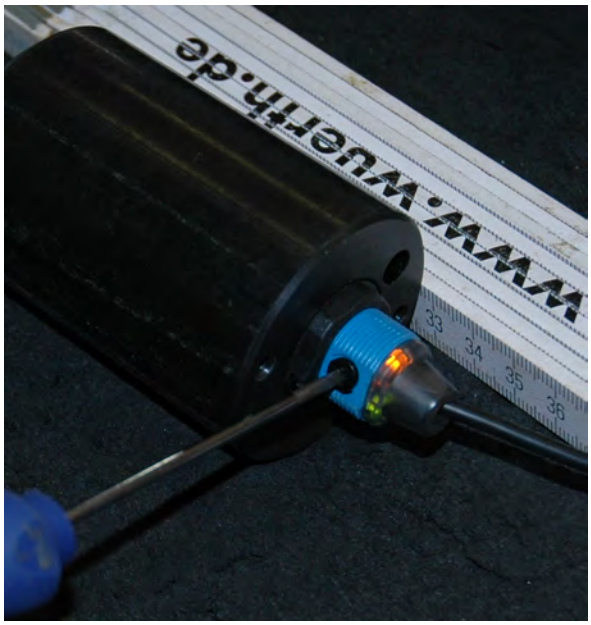

- ▶ Turn the screw so that the orange LED only just lights up. When the orange LED goes out, that means the ESK has just switched off.
- ▶ Remove the sheet of paper from the spreading controller.

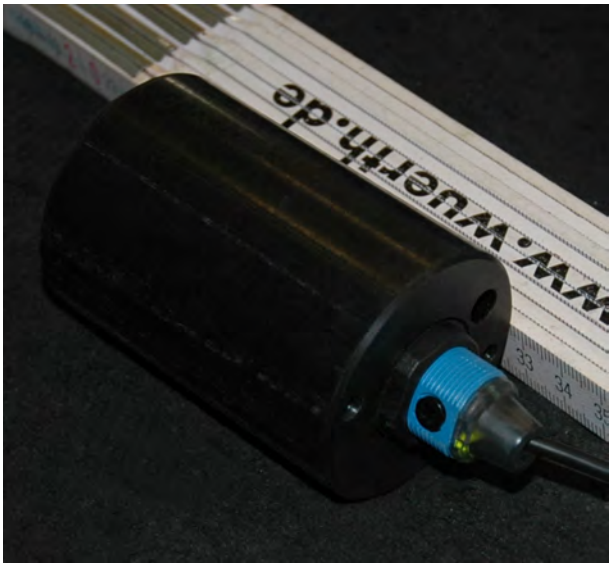

■ ***Type B***

- ▶ Switch on the EcoSat or EcoTron controller.
- ▶ Use the rotary potentiometer on the infra-red sensor so set the switching-off distance so that the material is detected up to about 20 cm below the spreader disc.

### 7.2.4 Screw monitoring

On machines with full path tracking (EcoSat), the speed of the shaft of the hydraulic motor on the chain drive is taken from a screw monitoring signal and is reported to the control desk in the cab.

The control desk compares these data with the target data and corrects them to ensure a very precise metering of the amount of spreading material. This screw monitoring requires absolutely no maintenance.



**⚠CAUTION!**

- ▶ Do not use jets of high-pressure water to clean electrical components!
- ▶ Do not use any steam cleaning equipment!

## 7.2.5 Disc probe

On automatic spreaders with full path tracking (EcoSat), the speed of the shaft of the spreader unit is taken from a disc probe signal and is reported to the control desk in the cab.

The control desk compares these data with the target data and corrects them to ensure a very precise spreading width of the material.

The LED of the disc probe must flash 6x per rotation of the disc.



**⚠CAUTION!**

- ▶ Do not use jets of high-pressure water to clean electrical components!
- ▶ Do not use any steam cleaning equipment!

# 8 Important information

This machine satisfies the safety requirements of the Machines Directive of the European Union.

CE

**⚠CAUTION!**

- The manufacturer declines all responsibility if the machine is not used in accordance with the instructions contained in the operator's manual!

The user must comply strictly with the general safety instructions and also with the regulations of the Trade Association!

Our recommendations and safety instructions make no claim to completeness!

# 8.1 Appendix

BUCHER municipal

**EC conformity declaration**
**in accordance with Machinery Directive 2006/42/EG**

**Manufacturer:**

Bucher Municipal Wernberg GmbH
Weidachstraße 1
92533 Wernberg-Köblitz
Germany
Person responsible for the documentation: C. Tretter

**Description of the machine (interchangeable equipment):**

Single-chamber spreader or double-chamber spreader (for DK version!) for winter services. The machine complies with all applicable regulations of Machinery Directive 2006/42/EC.

**Type:**

The machines are spreaders from the **TAXON series.**

This operator's manual describes types TAXON 25.1 and TAXON 30.1.

**Sources of information in the harmonised standards:**

| | |
|---|---|
| EN 12100 | Safety of machinery - General principles for design - Risk assessment and risk reduction |
| EN 17106-1 | Road operation machinery - Safety – Part 1: General requirements |
| EN 17106-3-2 | Road operation machinery - Safety – Part 3-2: Winter service machines - Specific requirements for spreading machines |

**Explanation:**

It is prohibited to put the spreader into operation until it has been determined that the carrier vehicle on which this spreader is to be set up meets the requirements of all applicable relevant EC Directives!

Wernberg-Köblitz, 02 February 2025 (Victoria Rasoulkhani)

Place and date of issue — Name and signature

# 9 Guarantee and warranty

RAUCH devices are manufactured using modern production methods and with the greatest of professional care, and are subjected to numerous inspections.

This is why RAUCH is offering a 12 month warranty if the following conditions are met:

- The warranty starts on the date of purchase.
- The warranty covers material or manufacturing defects. We are liable for third-party products (hydraulics, electronics) only to the extent of the relevant manufacturer During the warranty period, manufacturing and material defects will be rectified free of charge with the replacement or repair of the affected parts. Other rights extending beyond the above, such as claims for conversion, reduction, or replacement for reasons of damage not suffered by the supplied product are explicitly excluded. Warranty services are provided by authorized workshops, by RAUCH factory representatives or the factory itself.
- Consequences of natural wear, dirt, corrosion, and all defects caused by improper use as well as external influences shall be excluded from the warranty. Any unauthorized repairs or changes to the original condition will void the warranty. The warranty is voided if any spare parts other than genuine RAUCH spare parts were used. Therefore, the directions in the operating manual must be observed. Please contact our company representatives of the parent company if you have any questions or doubts. Warranty claims must be submitted to the company within 30 days at the latest after the damage has occurred. The date of purchase and the machine number must be indicated. If repairs under the warranty are required, they must be carried out by the authorized workshop only after consultation with RAUCH or the company's appointed representatives. The warranty period will not be extended by warranty work. Transport damage is not a factory defect and is therefore not covered by the manufacturer's warranty manufacturer.
- Claims for damage other than to the RAUCH devices will not be accepted. This also means that no liability will be accepted for damage resulting from spreading errors. Unauthorized modifications of the RAUCH devices may result in consequential damage, for which the manufacturer will not accept any liability. The manufacturer's exclusion from liability will not apply in the case of willful intent or gross negligence by the owner or a senior employee, and in cases where – according to the product liability law – there is liability for personal injury or material damage to privately used objects in the event of defects in the supplied product. The exclusion from liability will also not apply if characteristics are missing that are explicitly guaranteed, if the purpose of their guarantee was to protect the purchaser against damage not suffered by the supplied product itself.

**RAUCH Streutabellen**
**RAUCH Fertilizer Chart**
**Tableaux d'épandage RAUCH**
**Tabele wysiewu RAUCH**
**RAUCH Strooitabellen**
**RAUCH Tabella di spargimento**
**RAUCH Spredetabellen**
**RAUCH Levitystaulukot**
**RAUCH Spridningstabellen**
**RAUCH Tablas de abonado**

GET IT ON Google Play

Download on the App Store

**https://streutabellen.rauch.de/**

RAUCH

**RAUCH Landmaschinenfabrik GmbH**

Victoria Boulevard E 200
77836 Rheinmünster · Germany

info@rauch.de · www.rauch.de

Phone +49 (0) 7229/8580-0